The Production of High Performance Concrete In Hong Kong

PowerPoint Prepared By Andy C. W. Kwok

K. Wah Concrete Co. Ltd.

A Member of Concrete Producer Association

High Performance Concrete In Hong Kong

Three major categories can be classified: -

* Compressive Strength
* Durability
* Workability

High Compressive Strength Concrete

* Concrete Grade 50 and above

Placing of Grade 60 Concrete

Grade 90 Concrete for Kowloon Station Package 7

* Early Strength Concrete

Damaged Asphalt Carriageway

120m³ Early Strength Concrete Carriageway

High Durability Concrete

* Concrete for Marine Environment
  - Water binder ratio ≤ 0.38
  - Using supplementary cementitious materials 25 ~ 40% PFA or 60 ~ 90% GGBS plus 5% ~ 10% condensed silica fume

Placing of Silica Fume Concrete

Sea-wall Structure

* Concrete for Critical Structures
  - Grade 60 concrete, Water binder ratio $\leq$ 0.35
  - Using supplementary cementitious materials 35% PFA or 60% GGBS plus max. 8% CSF
  - 15 L/m^3 of corrosion inhibitor (D4)

Grade 60 Concrete for Crossbeam and Deck (Stonecutters Bridge)

Grade 60 Concrete for Tower (Stonecutters Bridge)

High Workability Concrete

* Tremie Concrete for Bored-pile Construction

Concrete Sampling

Slump Checking

Concrete Discharging

Concrete Placing

* Self-consolidating Concrete/ Self-compacting Concrete (SCC)

- Slump flow value 700 ± 50mm
- Min. 25% PFA
- Min. cementitious content 400kg/m³
- Water binder ratio ≤ 0.40
- Polycarboxylate-based superplasticizer admixture and modifier admixture

Proposed Sub-way Connected to MTRC Station

New Sub-way

Placing of Grade 60 Concrete

Mix Trial of Early Strength Concrete

Placing of Silica Fume Concrete

Placing of Self-compacting Concrete (SCC)

Supplementary Cementitious Materials for Concrete Production

- PFA
- GGBS
- Silica Fume (Powder & Slurry)

Admixtures for Concrete Production

- Comb-polymer High Range Water Reducer (Polycarboxylate-based superplasticizer)
- Superplasticizer Admixture (Naphthalene & Melamine Base)
- Modifier to improve the viscosity of concrete mix
- Anti-wash out admixture
- Low Shrinkage Agent

Mixing System For Concrete Production

* Dry Mixing

  - Cementitious materials, aggregates, water and admixtures are to be discharged into the mixer truck.

Single-leg Production Depot

* Wet Mixing

- Cementitious materials, aggregates, water and admixtures are to be discharged into central mixer and then the concrete is discharged into mixer truck for agitation.

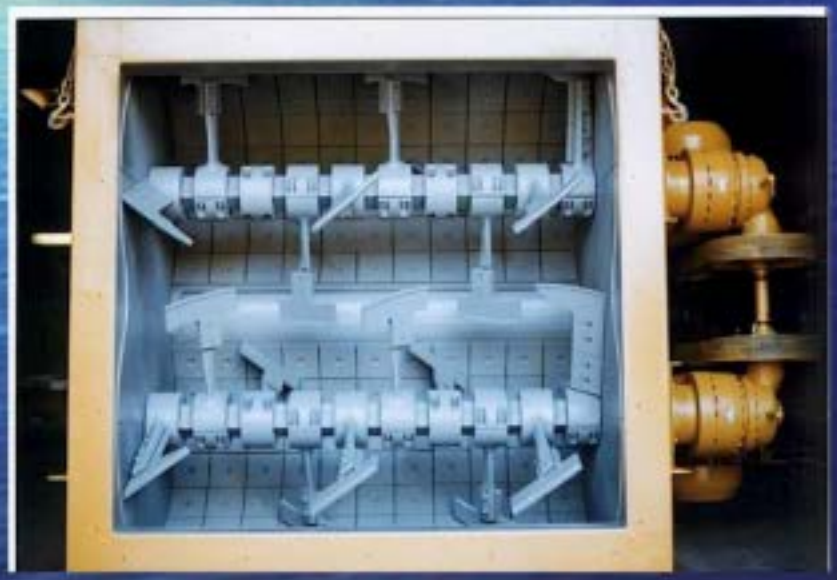

Cross-section Of The Mixer

4.0m³ Central Mixer

Ice-water Pipe

Different Materials Feeding Into The Mixer

Mobile Pan Mixer

Pan Mixer

* Semi-wet Mixing

- Pre-mixed “cement sand mortar” by small central mixer and then discharge it into the mixer truck with coarse aggregates simultaneously.

- Discharge the aggregates and cementitious slurry into the mixer truck simultaneously.

Cement Blender

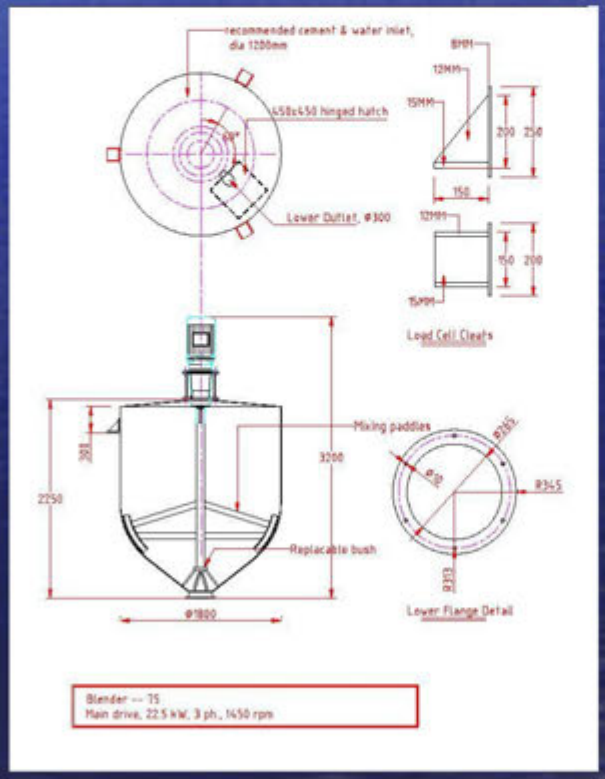

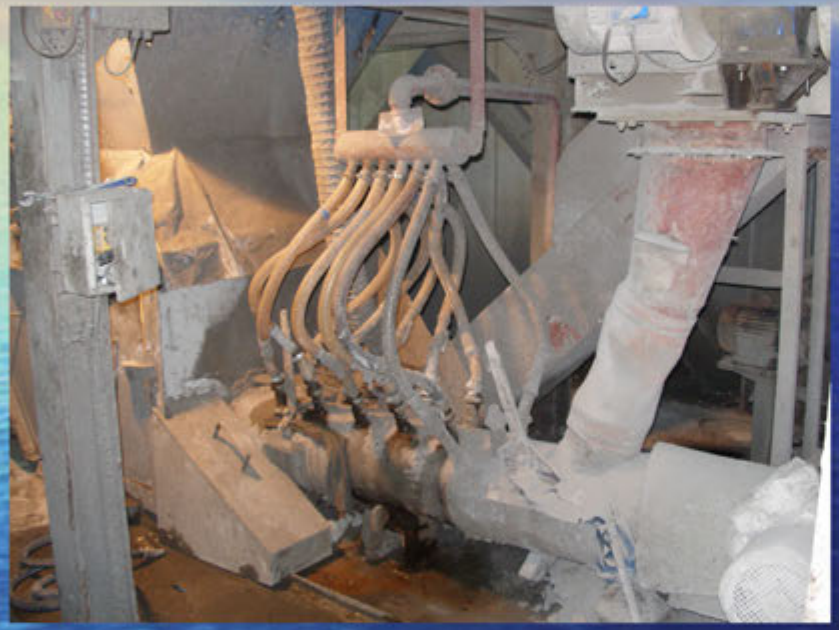

Materials Feeded Into Mixing Screw

Cementitious Slurry Discharge Into Truck Mixer

Facilities for Concrete Production

Admixture Weighing System

Twin Admixture Weight Hoppers

Ice-crushing System

Ice-crusher

Storing and Transporting Facilities

Crushed-ice Feeding Conveyer

Cube-ice Feeding System

Cube-ice Bucket

Screw Conveyor Feeding Pipe

Silica Fume Weight Hopper

CSF Weight Hopper

Moisture Content Measuring Device e.g. Moisture-Probe

Two Moisture-Probes To Be Installed In Fine Aggregate Bins

Control Measures for Concrete

* Compressive Strength

  - Cube Compressive Strength

- In-situ Concrete Strength By Core Extraction

* Durability Test

- Chloride Ion Permeability (AASHTO T 277-93)

- Water Absorption (BS 1881 : Part 122 : 1983)

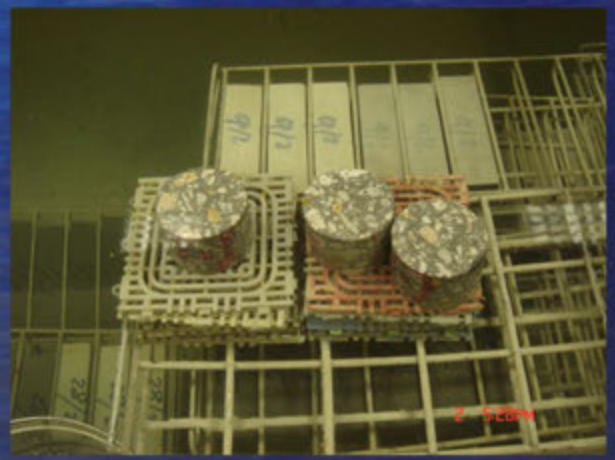

- Sorptivity (Scott Wilson P.S. Clause 30.25)

Control Measures for Concrete

* Workability Test: -

  - Slump

- Flow Table Value (BS1881 : Part 105 : 1984)

- Slump Flow Value

- L-shape Box

- U-box

Quality Management System

ISO 9001 : 2000

HKQAA, QSPSC Issue 6 : 2006

The End of Presentation

Thank You